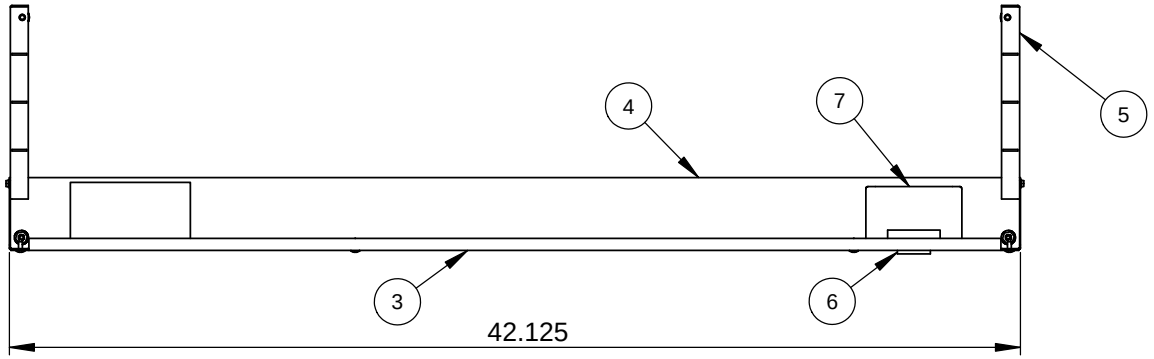

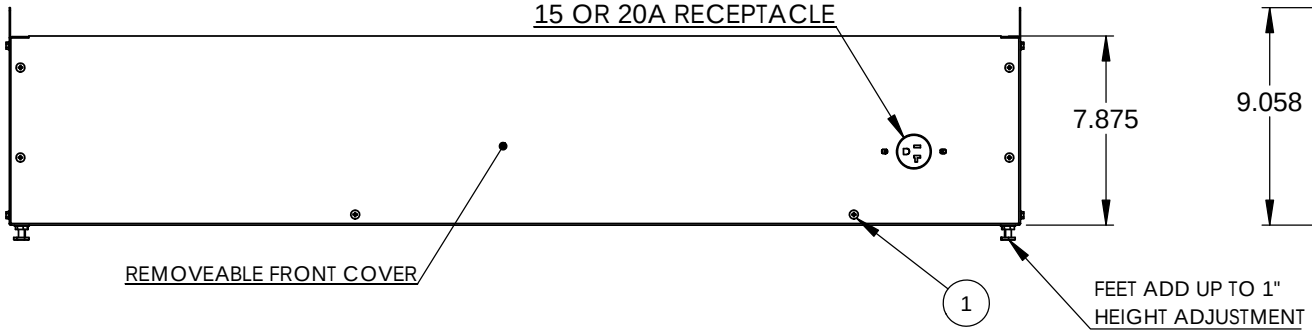

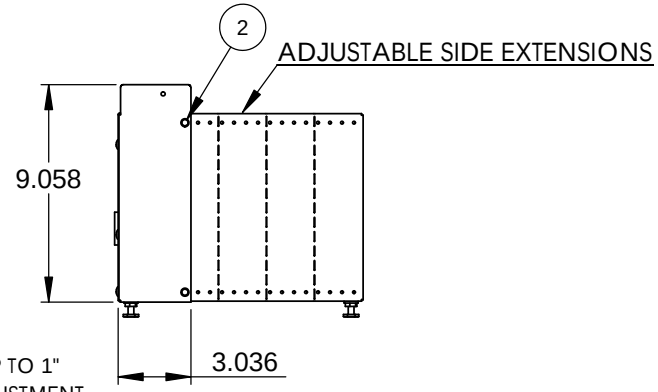

NOTES:
1- ATTACH RECEPTACLE TO RECEPTACLE BOX THEN ATTACH TO FRONT COVER USING SCREWS PROVIDED.
2- ATTACH FRONT COVER TO BASE (804435) USING 4- 85589 PAN HEAD SCREWS.
3- PUT 4- 85132 HEX HEAD SCREWS INTO BAG AND SEAL.
4- PLACE BASE ASSEMBLY BAG CONTAINING SCREWS AND 2- 804437 EXTENSIONS INTO BOX FOR SHIPPING.

ITEM NO.	PART NUMBER	QTY.
1	85589	6
2	85132	4
3	804666	1
4	804435	1
5	804437	2
6	RECEPTACLE	1
7	803639	1
8	85646	4
9	803562	8

REV	DATE	NOTES	BY

APPLICATION

	NAME	DATE
DRAWN	WWebber	22 Aug 2017
CHECKED		
ENG APPR.		
MFG APPR.		
Q.A.		

MATERIAL

FINISH

DO NOT SCALE DRAWING

COMMENTS:

TITLE:

8" H SUB BASE ASSEMBLY

Applied Comfort

SIZE	DWG. NO.	REV
G	804667	00

SCALE: 1:8 | WEIGHT: | SHEET 1 OF 1

PROPRIETARY AND CONFIDENTIAL

THE INFORMATION CONTAINED IN THIS DRAWING IS THE SOLE PROPERTY OF <INSERT COMPANY NAME HERE>. ANY REPRODUCTION IN PART OR AS A WHOLE WITHOUT THE WRITTEN PERMISSION OF <INSERT COMPANY NAME HERE> IS PROHIBITED.

5 4 3 2 1