GRILLE AND SLEEVE SOLD SEPARATELY

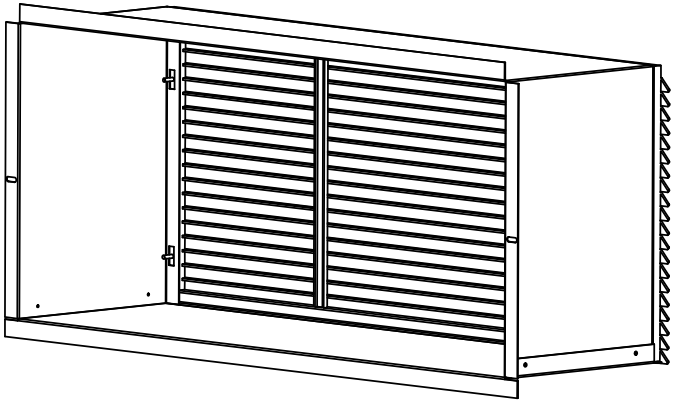

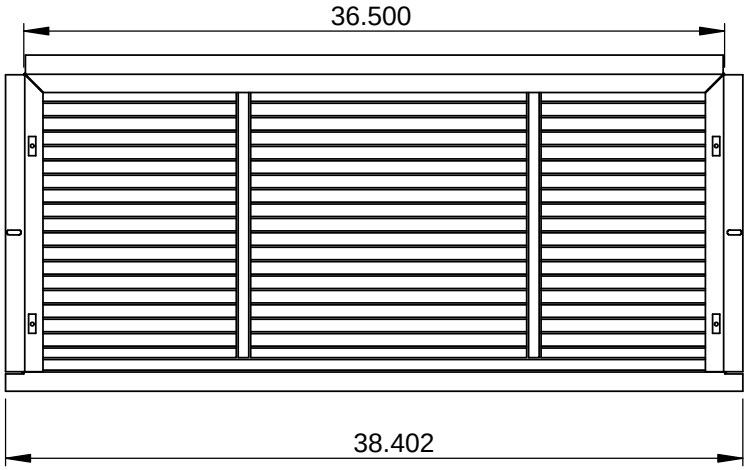

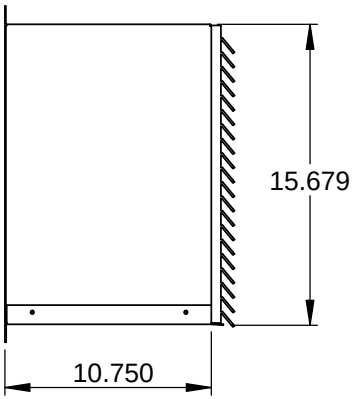

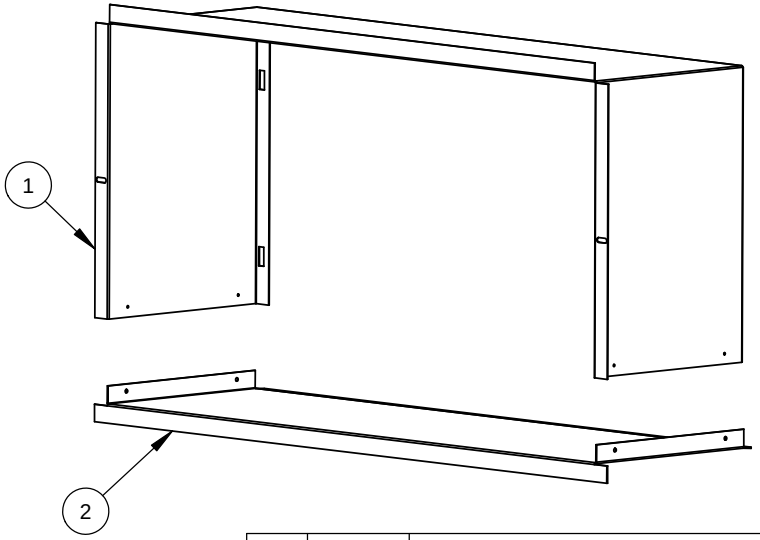

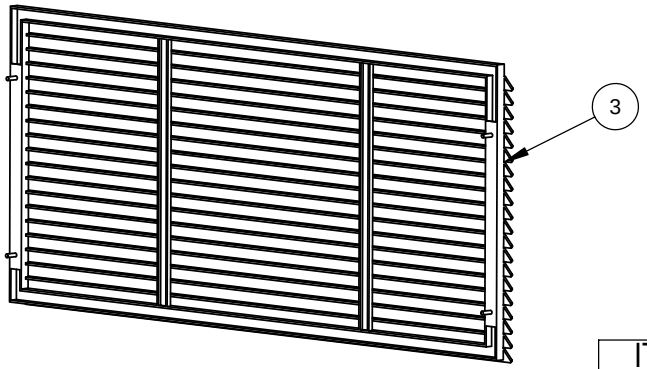

ITEM NO.	PART NUMBER	Defau lt/QTY.
1	803083	1
2	803084	1
3	803086	1

REV	DATE	NOTES	BY

APPLICATION

	NAME	DATE
DRAWN	WWebber	14 Dec 2012
CHECKED		
ENG APPR.		
MFG APPR.		
Q.A.		

MATERIAL

FINISH

DO NOT SCALE DRAWING

COMMENTS:

Applied Comfort

TITLE:

RM WALL SLEEVE ASSEMBLY

SIZE	DWG. NO.	REV
G	803085	00

SCALE: 1:10 | WEIGHT: | SHEET 1 OF 2

PROPRIETARY AND CONFIDENTIAL

THE INFORMATION CONTAINED IN THIS DRAWING IS THE SOLE PROPERTY OF <INSERT COMPANY NAME HERE>. ANY REPRODUCTION IN PART OR AS A WHOLE WITHOUT THE WRITTEN PERMISSION OF <INSERT COMPANY NAME HERE> IS PROHIBITED.

5 4 3 2 1

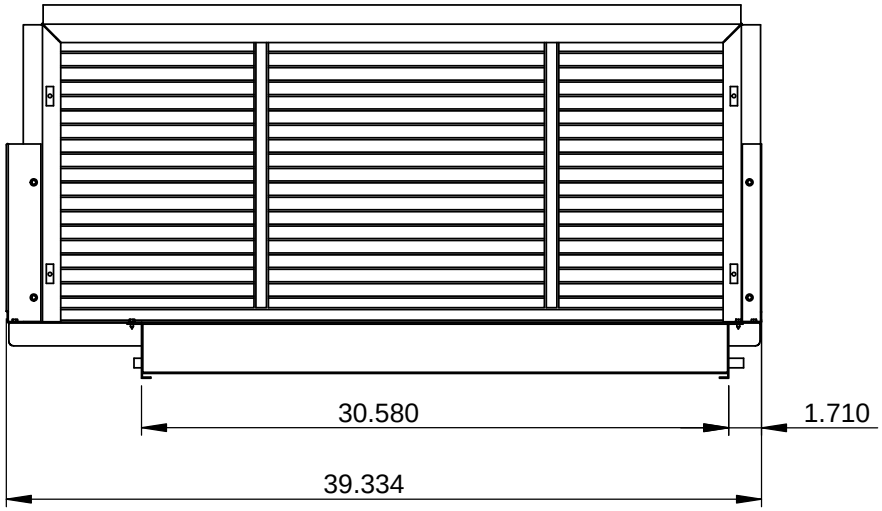

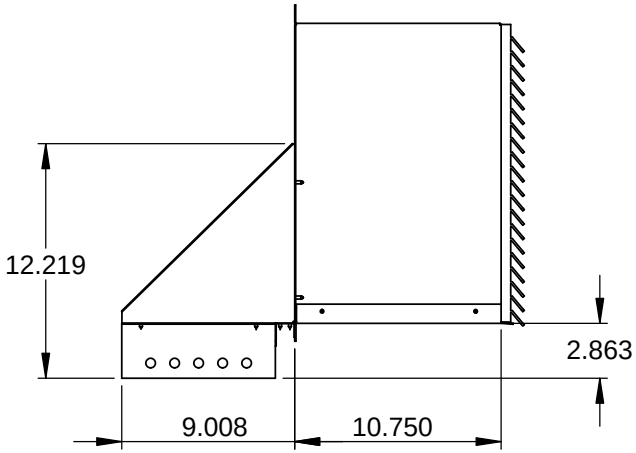

REV	DATE	NOTES	BY

APPLICATION

DO NOT SCALE DRAWING

	NAME	DATE
DRAWN	WWebber	14 Dec 2012
CHECKED		
ENG APPR.		
MFG APPR.		
Q.A.		
MATERIAL		
FINISH		

COMMENTS:

Applied COMFORT

TITLE: RM WALL SLEEVE ASSEMBLY

SIZE	DWG. NO.	REV
G	803085	00

SCALE: 1:10 | WEIGHT: | SHEET 2 OF 2

PROPRIETARY AND CONFIDENTIAL

THE INFORMATION CONTAINED IN THIS DRAWING IS THE SOLE PROPERTY OF <INSERT COMPANY NAME HERE>. ANY REPRODUCTION IN PART OR AS A WHOLE WITHOUT THE WRITTEN PERMISSION OF <INSERT COMPANY NAME HERE> IS PROHIBITED.

5 4 3 2 1